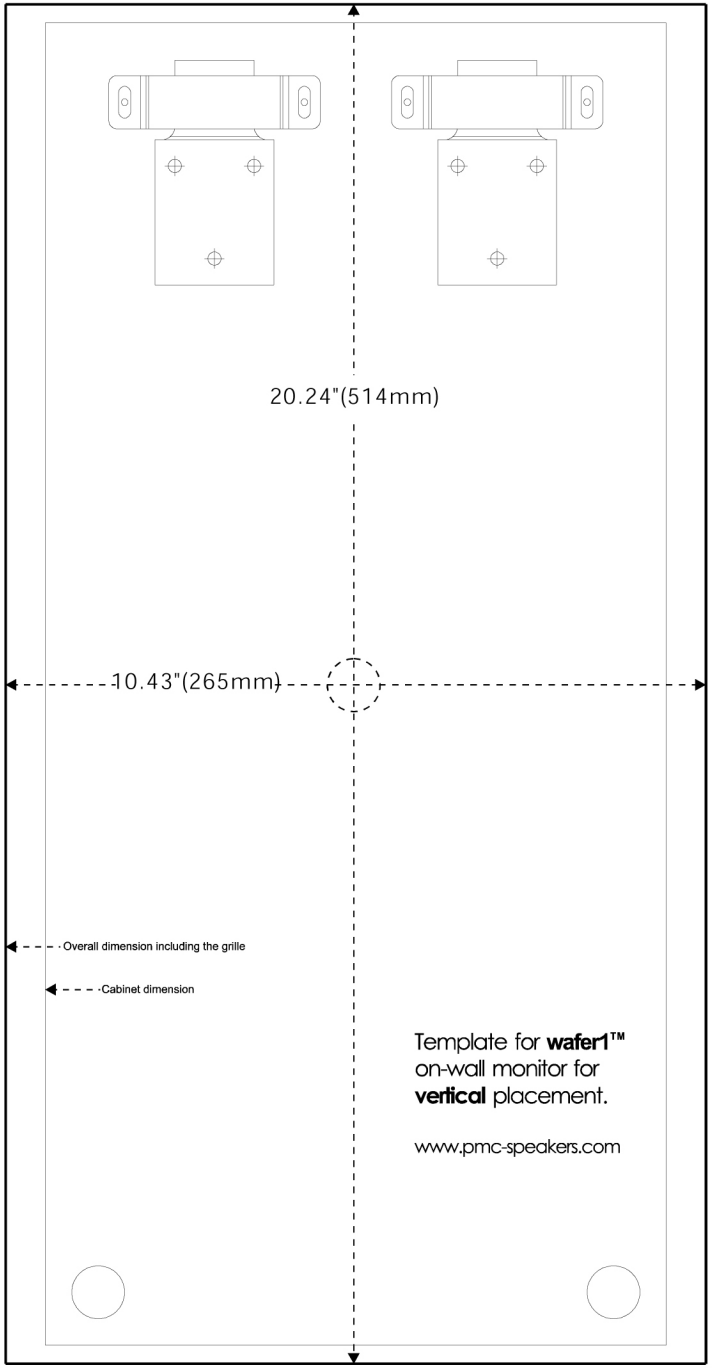
20.24"(514mm)
10.43"(265mm)
Overall dimension including the grille
Cabinet dimension
Template for **wafer1™**
on-wall monitor for
vertical placement.
www.pmc-speakers.com

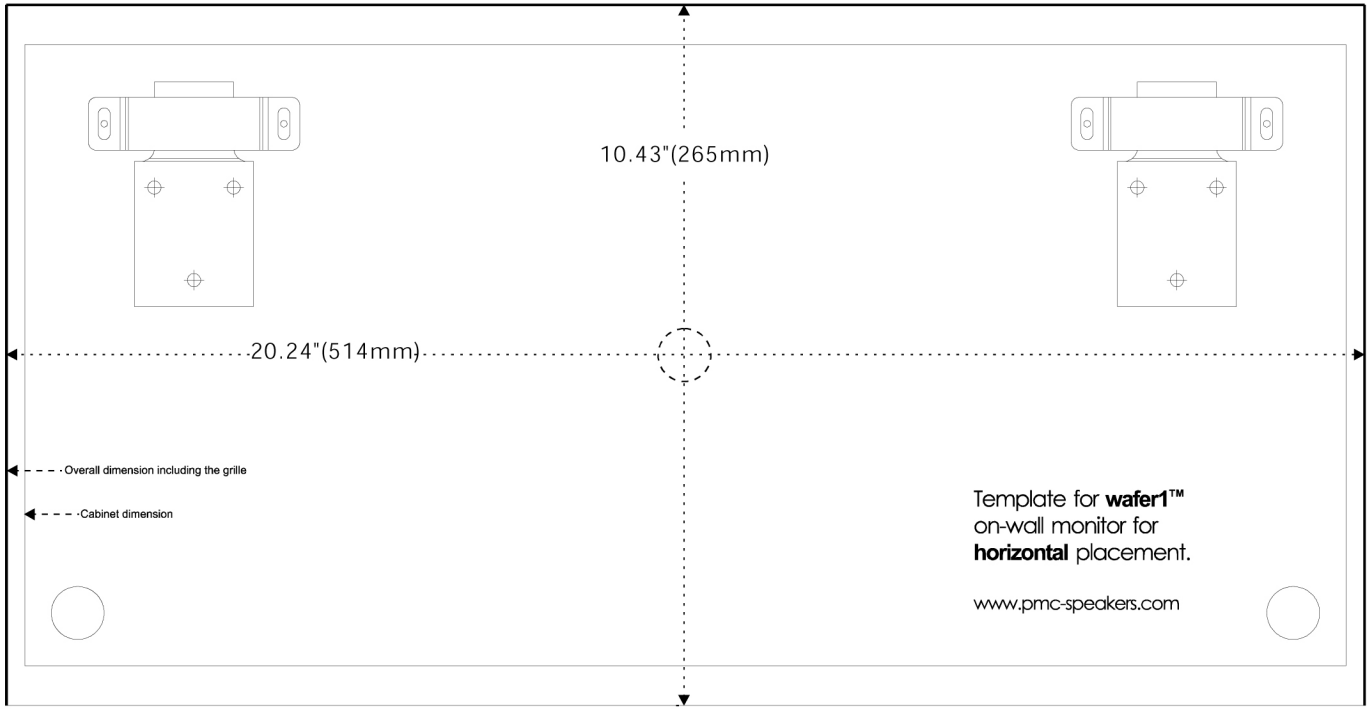
10.43"(265mm)
20.24"(514mm)
Overall dimension including the grille
Cabinet dimension
Template for **wafer1™**
on-wall monitor for
horizontal placement.
www.pmc-speakers.com